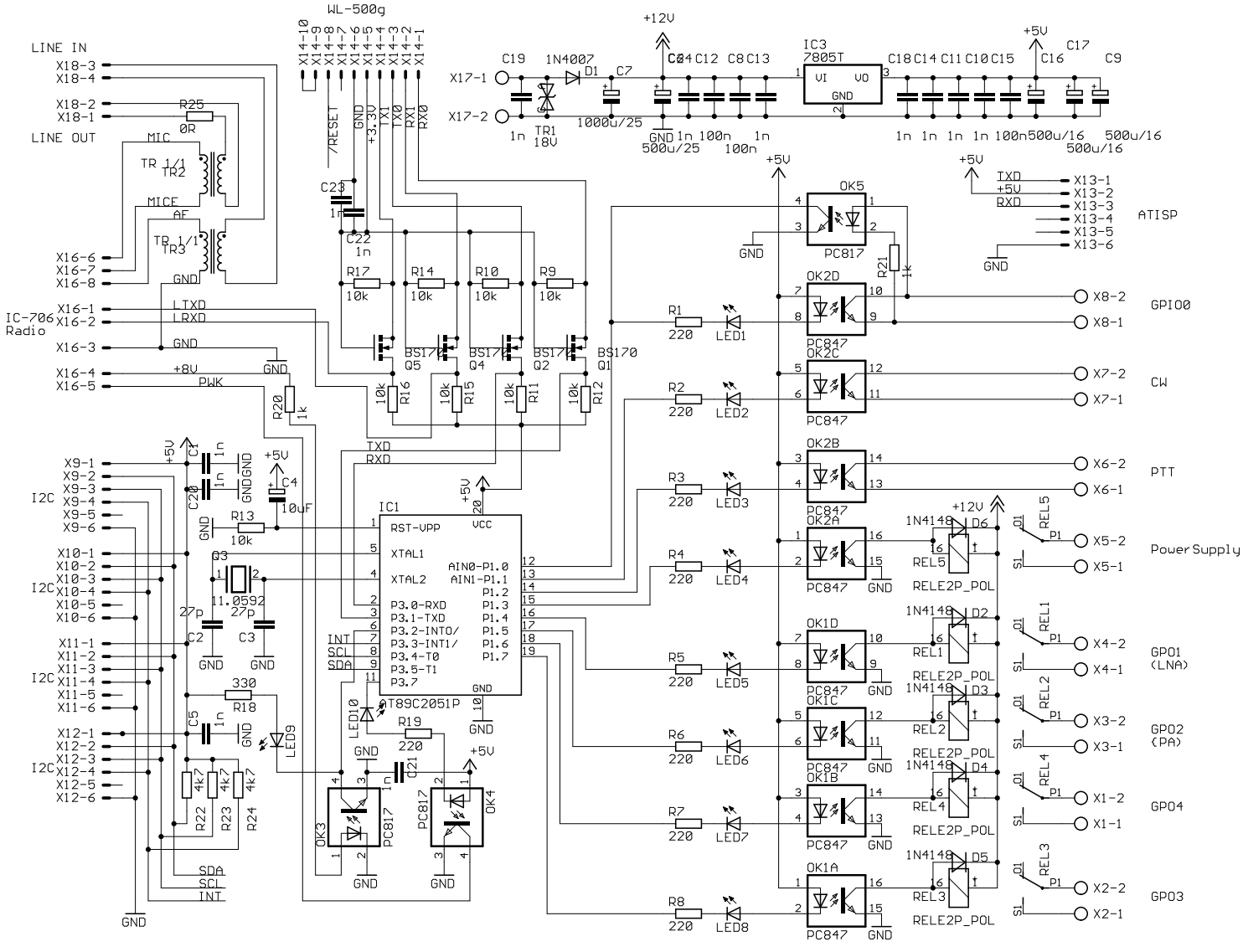

WL-500g
LINE IN
LINE OUT
IC-706 Radio
IC1
AT89C2051P
IC3 7805T
ATISP
GPIO0
CW
PTT
Power Supply
GPO1 (LNA)
GPO2 (PA)
GPO4
GPO3